Kugelhahn, voller Durchgang

Nr. 90

TECHNISCHE MERKMALE

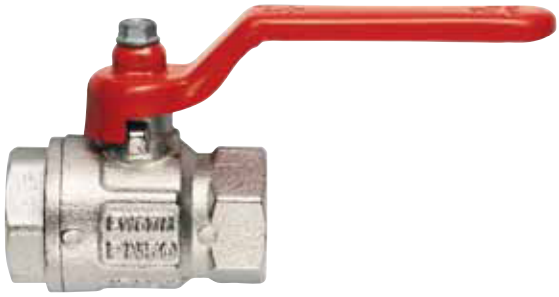

Gewinde Innen/Innen
Griff aus Stahl lackiert
Körper Messing vernickelt
Betriebstemperatur: -20°C bis 150°C.
Gewinde ISO 228
(ähnlich DIN EN ISO 228 und BS EN ISO 228).

Feale/female threads.
Lever handle in steel .
Body in nickel-plated brass.
Minimum and maximum working temperatures: -20°C, 150°C.
Threads: ISO228
(equivalent to DIN EN ISO 228 and BS EN ISO 228).

MISURA/SIZE	1/4" (DN 8)	3/8" (DN 10)	1/2" (DN 15)	3/4" (DN 20)	1" (DN 25)	1"1/4 (DN 32)	1"1/2 (DN 40)	2" (DN 50)	2"1/2 (DN 65)	3" (DN 80)	4" (DN 100)
PRESSIONE/PRESSURE	50bar/725psi	50bar/725psi	50bar/725psi	40bar/580psi	40bar/580psi	30bar/435psi	30bar/435psi	25bar/362.5psi	18bar/261psi	16bar/232psi	14bar/203psi
IMBALLO/PACKING	12/192	12/192	12/156	8/104	8/64	4/48	2/26	2/18	1/9	1/6	1/4

ABMESSUNGEN

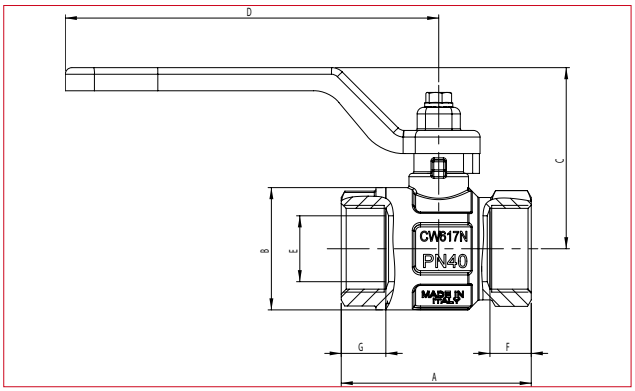

MISURE / SIZE	1/4"	3/8"	1/2"	3/4"	1"	1"1/4	1"1/2	2"	2"1/2	3"	4"
DN	8	10	15	20	25	32	40	50	65	80	100
A (mm)	44,4	44,4	50,5	57,5	70	80,5	94,5	112,5	134,5	157	190
B (mm)	23,5	24	30,5	37	45,5	57	70	84	109	131	164
C (mm)	37	37	41	55	59	74,5	80,5	96,5	116	133	148
D (mm)	80	80	80	113	113	138	138	157,8	197	250	250
E (mm)	10	10	15	20	25	32	40	50	65	80	100
F (mm)	10	10	12	12,5	15	17	18,5	22	24	26	30
G (mm)	10	10	12,5	13,5	15	16,5	17,5	20,5	24	26	30
PRESS. ATMOSF./ WORK. PRESS. Kg/cm² - bar	50	50	50	40	40	30	30	25	18	16	14
PRESS. ATMOSF. PSI LBS WORK. PRESS	710	710	710	570	570	430	430	360	260	230	200

MATERIALIEN

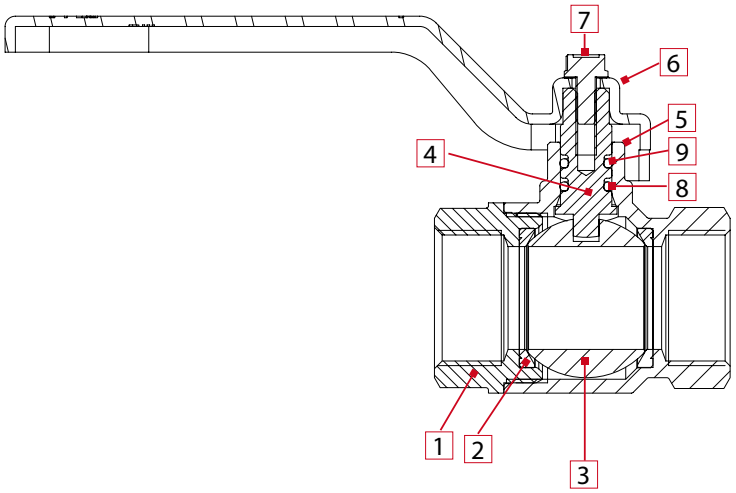

POS.	BESCHREIBUNG	ANZAHL	MATERIAL
1	Gewinde	1	Messing CW617N
2	Sitz	2	*PTFE*
3	Kugel	1	Messing CW617N
4	Bolzen	1	Messing CW614N
5	Körper	1	Messing CW617N
6	Griff	1	Fe P04
7	Schraube	1	CB4FF (C34)
8	*O-Ring*	1	NBR 70/SH - classe H3
9	*O-Ring*	1	VITON 70/SH - classe H3

Kugelhahn Nr. 90

MISURE / SIZE	1/4″	3/8″	1/2″	3/4″	1″	1″1/4	1″1/2	2″	2″1/2	3″	4″
ø	10	10	15	20	25	32	40	50	65	80	100
Kv	3,45	5,00	15,65	26,26	41,44	63,69	101	169	348	390	725
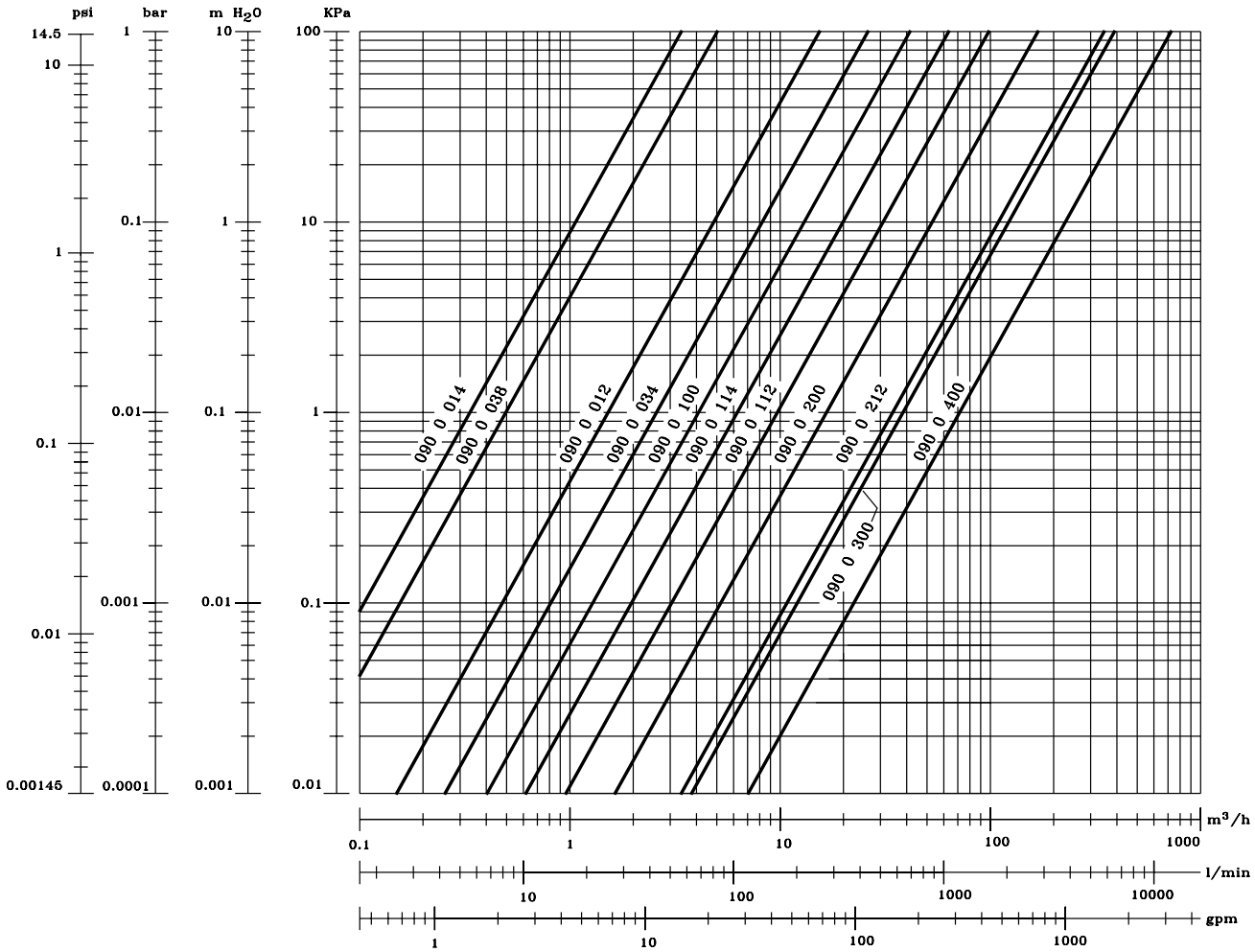
Con acqua - With water